Pololu High-Power Stepper Motor Driver 36v4

Schematic diagram
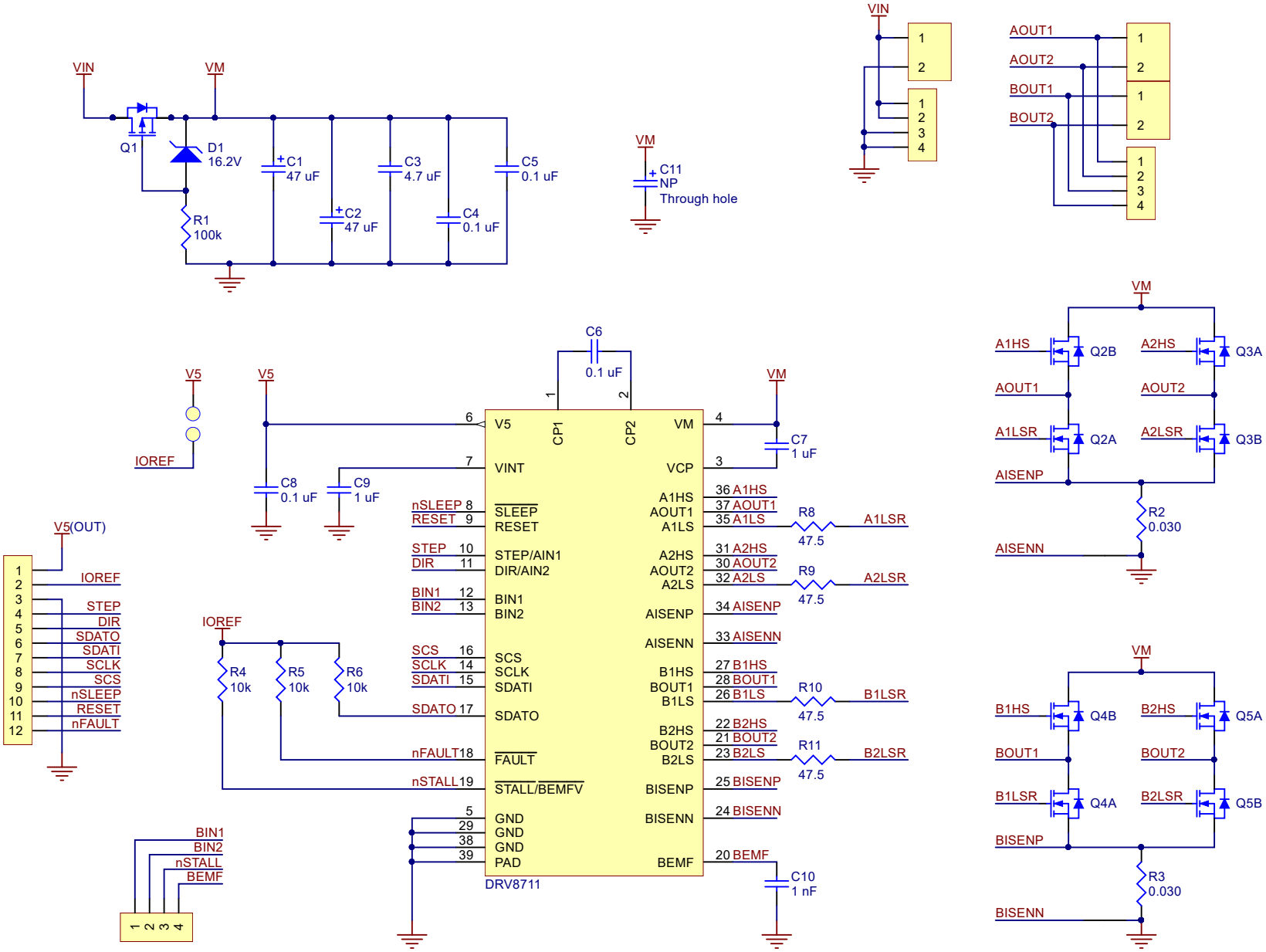
©2019 Pololu Corporation
www.pololu.com